BUREAU J. G. JAMES JR. BUREAU ENGINEER F. READ DRAFTSMAN d.b. DATE 5-27-77 SCALE N/T/S

REVISIONS			
NO.	DATE	BY	REMARKS
1	5-1-84	JH	ADDED EXISTING STD. GRATE
2	5-7-85	L.R.H.	REMOVED DIV. OF PUBLIC WORKS (T. BLK.)
3	2-10-88	D.H.G.	REMOVED DEPARTMENT (T. BLK.)

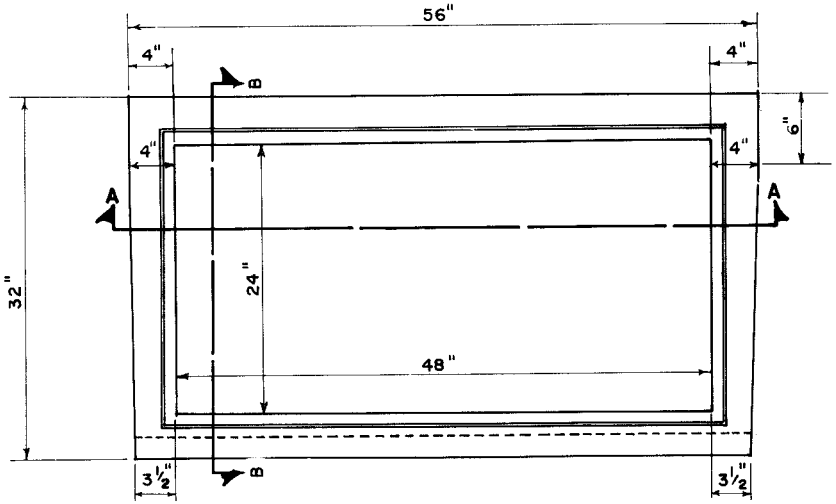

PLAN OF RIM

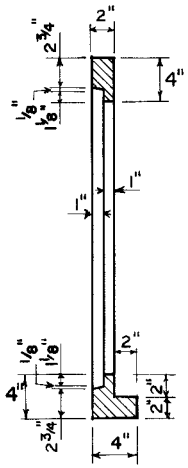

SECTION B-B

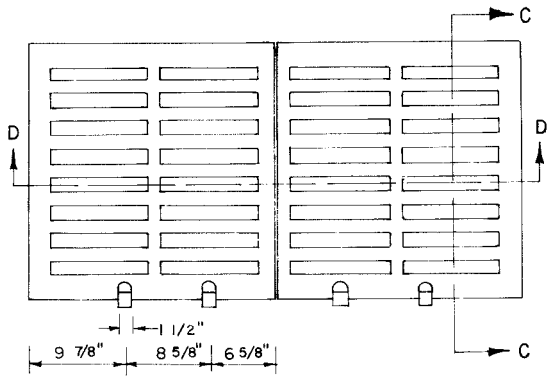

PLAN OF GRATING

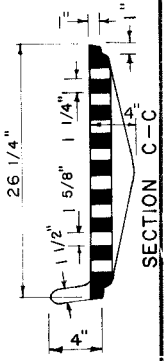

SECTION C-C

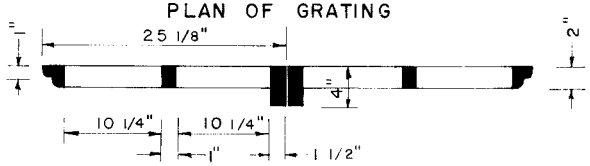

SECTION D-D

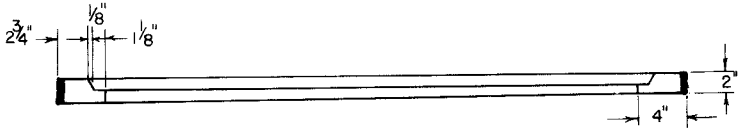

SECTION A-A

CITY OF MEMPHIS
DIVISION OF ENGINEERING

DESIGN STANDARD
FOR
TAPERED RIM AND GRATING FOR
6-72 INLET

CITY ENGINEER DATE

DWG. NO 22

JC-5756