BUREAU J. G. JAMES JR. BUREAU ENGINEER F. READ DRAFTSMAN G.A.S. DATE 10-77 SCALE N/T/S

NOTE: CONC. TO BE CLASS 'A'

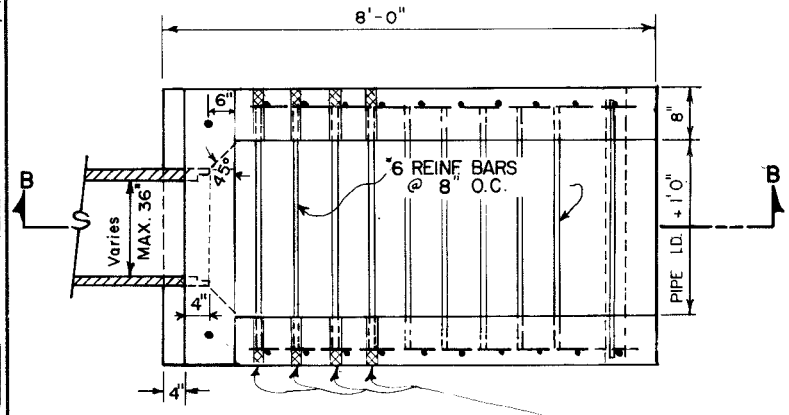

PLAN

1" DIA. P.V.C. PIPE THROUGH WALL FOR TOP FOUR BARS ONLY. PLACE GROUT IN P.V.C. PIPE FOR TEMPORARY INSTALLATION OF #6 BARS.

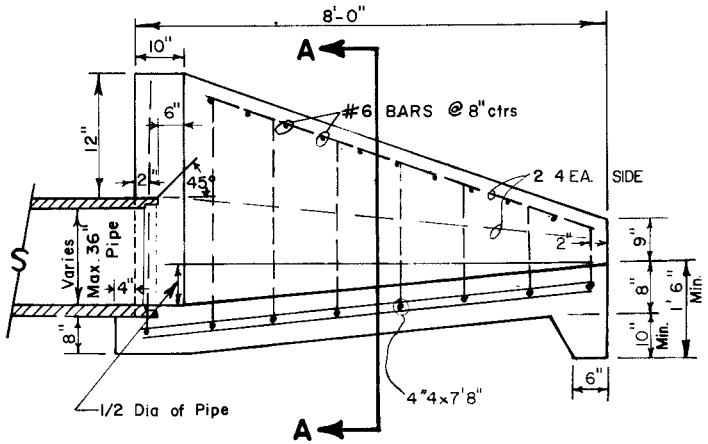

SECTION B-B

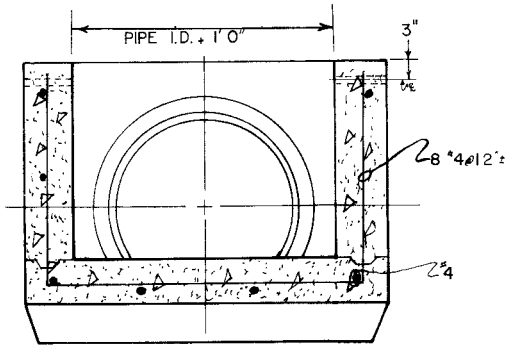

SECTION A-A

REVISIONS			
NO.	DATE	BY	REMARKS
1	5-30-85	L.R.H.	REMOVED DIV. OF PUBLIC WORKS (T. BLK.)
2	7-16-87	D.H.G.	ADD: CLASS 'A'
3	2-22-88	D.H.G.	REMOVED DEPARTMENT (T. BLK.)

CONVERSIONS	
ENGLISH	METRIC

CITY OF MEMPHIS
DIVISION OF ENGINEERING

DESIGN STANDARD
FOR
SPECIAL HEADWALL TYPE "A"

CITY ENGINEER DATE

DWG. NO. 25

JC5756