BUREAU, STREET DESIGN ____ BUREAU ENGINEER ____ DRAFTSMAN J.T.C. DATE 6/1/78 SCALE NONE

REVISIONS			
NO.	DATE	BY	REMARKS
1	MAY 21, 1979	J.T.C.	Dimension changes
2	5-30-85	L.R.H.	REMOVED DIV. OF PUBLIC WORKS (T. BLK.)
3	7-22-87	D.H.G.	ADD: 2" CLEAR ; CLASS 'A'
4	2-29-88	D.H.G.	REMOVED DEPARTMENT (T. BLK.)

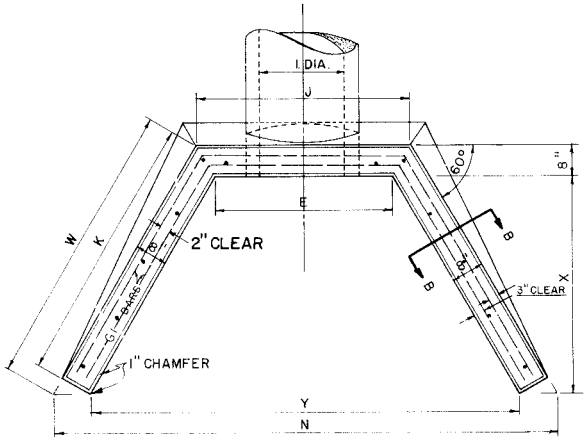

PLAN
INLET

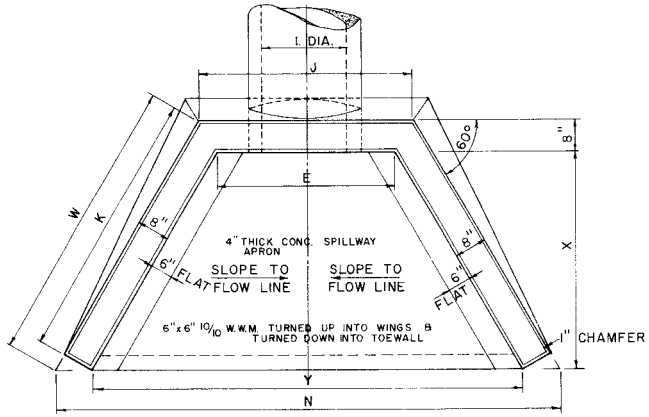

PLAN
OUTLET

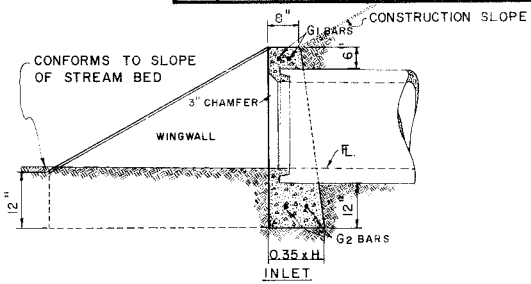

INLET

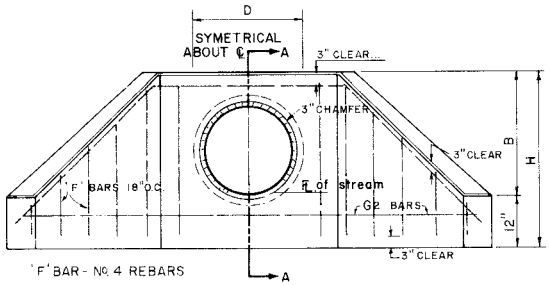

ELEVATION
INLET

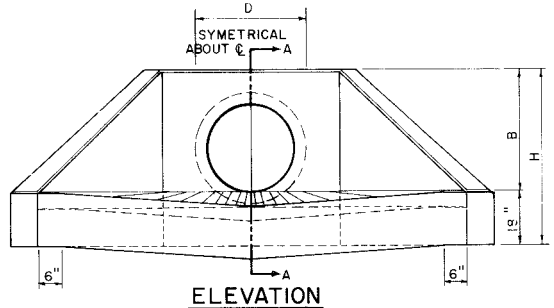

ELEVATION
OUTLET

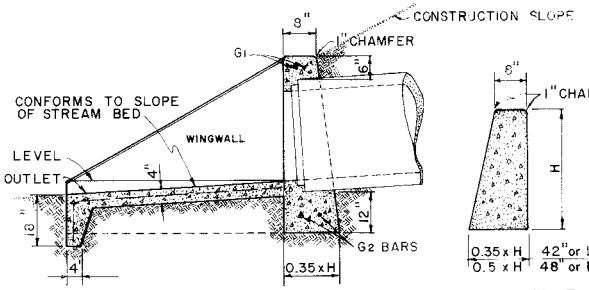

SECTION A-A
OUTLET

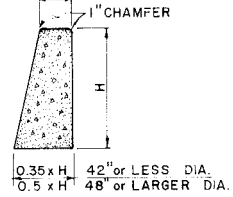

SECTION B-B
WINGWALL SECTION

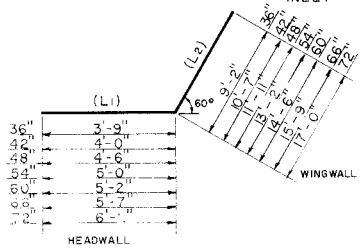

G1 & G2 BARS
NO. 4 RE BARS

TABLE OF DIMENSIONS AND DIAMETERS*

DIA.	15"	18"	21"	24"	30"	36"	42"	48"	54"	60"	66"	72"
B	1'-11 1/2"	2'-2 1/4"	2'-5 1/4"	2'-8 1/2"	3'-3"	3'-9 1/2"	4'-4"	4'-10 1/2"	5'-5"	6'-0"	6'-6 1/2"	7'-1"
D	1'-7 1/4"	1'-10 1/2"	2'-1 1/2"	2'-5"	3'-0"	3'-7"	4'-2"	4'-9"	5'-4"	6'-0"	6'-7"	7'-2"
E	1'-9 1/4"	2'-0 1/2"	2'-3 1/2"	2'-7"	3'-2"	3'-9"	4'-4"	4'-10"	5'-6"	6'-2"	6'-9"	7'-4"
H	3'-1 1/4"	3'-4 1/2"	3'-7 1/2"	3'-11"	4'-6"	5'-1"	5'-8"	6'-3"	6'-10"	7'-6"	8'-1"	8'-8"
J	2'-7 5/8"	2'-10 7/8"	3'-1 7/8"	3'-5 3/8"	4'-0 3/8"	4'-10 5/8"	5'-2 3/8"	5'-9 3/8"	6'-4 3/8"	7'-0 3/8"	7'-7 3/8"	8'-2 3/8"
K	4'-10 5/8"	5'-5 3/4"	6'-0 5/8"	6'-8 1/4"	7'-11 1/4"	9'-2 1/4"	10'-5 1/4"	11'-8 1/4"	12'-11 1/4"	14'-3 1/2"	15'-6 1/2"	16'-9 1/2"
N	7'-11 1/2"	8'-9 7/8"	9'-7 7/8"	10'-6 7/8"	12'-4 7/8"	14'-2 7/8"	16'-0 7/8"	17'-10 7/8"	19'-8 7/8"	21'-9 1/8"	23'-7 1/8"	25'-5 1/8"
W	5'-3 3/4"	5'-11"	6'-5 7/8"	7'-1 1/2"	8'-4 1/2"	9'-7 1/2"	10'-10 1/2"	12'-1 1/2"	13'-4 1/2"	14'-8 5/8"	15'-11 5/8"	17'-2 5/8"
X	3'-10 1/4"	4'-4 1/2"	4'-10 1/2"	5'-5"	6'-6"	7'-7"	8'-8"	9'-9"	10'-10"	12'-0"	13'-1"	14'-2"
Y	6'-2 5/8"	7'-1 1/8"	7'-11"	8'-10 1/8"	10'-8 1/8"	12'-6 1/8"	14'-4 1/8"	16'-2 1/8"	18'-0 1/8"	20'-0 1/4"	21'-10 1/4"	23'-8 1/4"

*This Table of Dimensions is for 2:1 Construction Slope

NOTE: RIGHT WING LOOKING INTO PIPE, LEFT WING OPPOSITE HAND

Conc. to be CLASS 'A'

CITY OF MEMPHIS
DIVISION OF ENGINEERING

DESIGN STANDARD FOR TYPE "D" HEADWALL with WINGWALLS

DEPUTY CITY ENGINEER ____ DATE ____

DWG. NO. 20